ENGR 212 – Laboratory 7 (Informal Report)

Difference Amplifier - simulations

OBJECTIVES:

To study an operational amplifier and a difference amplifier circuit by:

- Completing the analysis of the circuit, and selecting resistors that satisfy design specifications.
- Performing Pspice simulations

MATERIALS:

- Paper for hand calculations
- LTSpice simulation software

PART 1: DESIGN AND ANALYSIS

Consider the circuit shown:

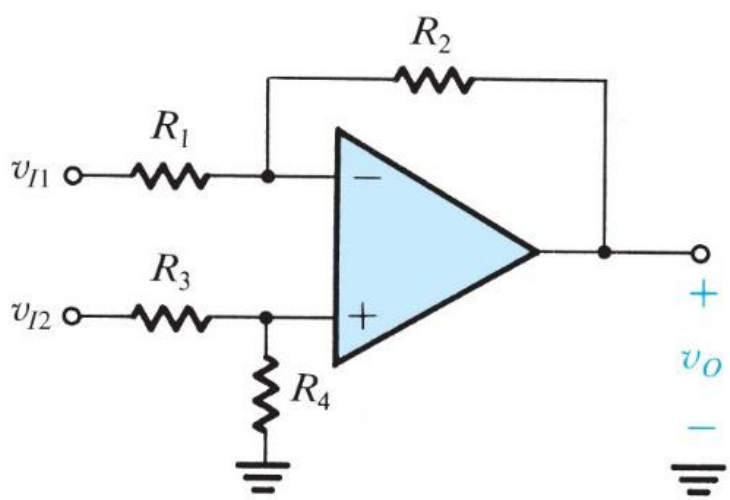

Design the circuit such that the gain is 10 V/V. Select resistor values such that $\mathbf{R_1 + R_3 = 2k\Omega}$. Use supplies (to power V_{CC} and V_{EE}) of $V_+ = 15V$ and $V_- = -15$ V. In terms of the two input voltages, v_o is

$$v_o = -\frac{R_2}{R_1} v_{I1} + \frac{1 + R_2/R_1}{1 + R_3/R_4} v_{I2}$$

With the constraint that if

$$\frac{R_2}{R_1} = \frac{R_4}{R_3}$$

the output voltage becomes

$$v_0 = \frac{R_2}{R_1}(v_{I2} - v_{I1})$$

and thus the circuit acts as a differential amplifier with a gain of

$$A_d = \frac{R_2}{R_1}$$

Hand Calculations

- Sketch the circuit in your lab notes, clearly labeling the op-amp terminals.
- What values of R_1, R_2, R_3 and R_4 do you need to meet the design specifications? You choose the values as long as they meet the design specifications.
- You will run two different cases:

I. One case where the relationship

$$\frac{R_2}{R_1} = \frac{R_4}{R_3}$$

holds (this case has a gain of 10 V/V) and

II. A second case where this relationship does not hold. In both cases you should select resistor values such that $\mathbf{R_1 + R_3 = 2k\Omega}$.

Simulation using LTSpice (you will have two different configurations)

- Open the **LTSpice** software. *Drawing the schematic:* File->New Schematic.
- Place the resistors. (Ctrl+R to rotate). Right-click on the resistor and enter a value in the box (10k, for example). Click Esc or right-click on your mouse to remove the resistor from the mouse after placing the required number of resistors.
- For the operational amplifier, go to Component and search for *universal.* Select **Universal OpAmp2.**
- Click on the component icon. Type "voltage" in the box. Then place the voltage sources.
- Connect all the components by using the wiring tool. Note that in LTSpice it is okay to wire through the components.
- Place grounds as needed.
- While leaving v_{I1} grounded, provide a DC input to v_{I2} in increments of 0.1 V, from -1V to 1 V. Note that this is a DC Sweep.
- Simulate->Configure analysis. Select DC sweep. First enter the name of the voltage source on which to do the sweep.
- Linear sweep-> -1 to +1 volts in steps of 0.1 V.
- After running it, you can right-click in the window that comes up and select *Add trace.*
- Note that you can use *Label Net* to label a node as Vo. Then V(Vo) will appear in expressions to add.
- Plot the input and output voltage traces. *You will need these and the circuit schematic for your lab report.* You also need to write how you decided on values for R_1, R_2, R_3 and R_4.
- What is the simulated value of the differential gain?

- While leaving v_{I2} grounded, provide a DC input to v_{I1} in increments of 0.1 V, from -1V to 1 V.
- Plot the input and output voltage traces for this case as well. *These should also be turned in with the lab report.*
- What is the simulated value of the differential gain?

How to copy schematic to clipboard: Right-click on an empty space within the schematic editor, then select "View > copy image to clipboard." This copies a bitmap image of the visible schematic area to your clipboard. You can then paste the copy of the schematic directly into a Word document.

Export as Image (for a Plot Window): If you are working with a plot window, you can right-click the plot window and select "Copy image to clipboard".